LOCATION DETECTION USING BAROSENSE ON PEIZOELECTRICITY BASED SHOES

MAJOR PROJECT REPORT

Submitted in partial fulfilment of the requirement for the

award of degree of

BACHELOR OF ENGINEERING

IN

ELECTRICAL AND ELECTRONICS ENGINEERING

SUBMITTED BY

MANIK DALAL
UE164029

NIKHIL PANDEY
UE164036

UNDER GUIDANCE OF

Dr. YAJVENDER PAL VERMA

UNIVERSITY INSITITUTE OF ENGINEERING AND TECHNOLOGY
PANJAB UNIVERSITY
CHANDIGARH

2020

UNIVERSITY INSTITUTE OF ENGINEERING AND TECHNOLOGY

PANJAB UNIVERSITY

CHANDIGARH

Candidates' Declaration

We hereby declare that the entire project work embodied in this minor project entitled ***"LOCATION DETECTION USING BAROSENSE ON PEIZOELECTRICITY BASED SHOES"***, towards the partial fulfilment of the requirement for the degree of **B.E.** in **Electrical and Electronics Engineering**, is an authentic bonafide record of our work carried out under the supervision of ***Dr. Yajvender Pal Verma***, Assistant Professor, Department of Electrical and Electronics Engineering, UIET, Panjab University, Chandigarh.

The work presented in this project has not been submitted by us for the award of any other degree of this or any other University. We have taken care in all respects to honour the intellectual property rights and we have acknowledged the contribution(s) of others for using them for this academic purpose.

Date: 5th July 2020

Place: Chandigarh

MANIK DALAL
UE164029

NIKHIL PANDEY
UE164036

UNIVERSITY INSTITUTE OF ENGINEERING AND TECHNOLOGY

PANJAB UNIVERSITY

CHANDIGARH

Certificate

This is to certify that **Mr. Manik Dalal** and **Mr. Nikhil Pandey** completed their major project under my supervision and the given declaration made by the students is correct and true to the best of my knowledge.

_____

Dr. Yajvender Pal Verma
Assistant Professor
EEE Department
UIET, Panjab University

Date:5th July 2020

Place: Chandigarh

Acknowledgement

We would like to express our special thanks of gratitude to our teacher *Dr. Yajvender Pal Verma* who gave us the golden opportunity to do this wonderful project on the topic Location Detection Using Barosense On Piezoelectricity Based Shoes, which also helped us in doing a lot of Research and we came to know about so many new things I am really thankful to them.

Secondly we would also like to thank our parents and friends who helped us a lot in finalizing this project within the limited time frame.

We would also express our gratitude to *Dr. Naveen Aggarwal* for providing assistance required throughout the project timeline.

Lastly we would like to thank *Mr. Abhinav and Mr. Sahil Jaglan* who helped us a lot in finalizing this project and providing the finishing touches to it.

Manik Dalal

Nikhil Pandey

TABLE OF CONTENTS

Candidates' Declaration **1**
Certificate **2**
Acknowledgement **3**
Table of Contents **4**
Abstract **5**
List of Figures and Tables **6**

Chapter 1. INTRODUCTION **8**

1.1 Energy & Emergency Response Scenario 8

1.2 Motivation for this Work 8

1.3 Outline of the Report 9

Chapter 2. LITERATURE REVIEW **10**

2.1 Introduction 10

2.2 Overview of the Work 10

2.3 Location Detection 11

2.4 BAROSense Algorithm 13

2.5 Microcontrollers 13

2.6 Problem Statement 14

2.7 Objectives of the Work 14

2.8 Summary 15

Chapter 3. SYSTEM DESCRIPTION **16**

3.1 Introduction 16

3.1.1 Arduino 16

3.1.2 BMP180 Pressure Sensor 19

3.1.3 LTC3588 IC 21

3.1.4 Piezoelectric Principle 22

3.2 Design of Shoe Assembly 22

3.3 Design of Transmitter & Receiver Circuit 23

3.3.1 Introduction 23

3.3.2 Transmitter Circuit 24

3.3.3 Receiver Circuit 25

Chapter 4. PERFORMANCE OF THE SYSTEM IN REAL TIME ENVIRONMENT 27

4.1 Introduction 27

4.2 Results and Discussions 27

Chapter 5. CONCLUSIONS AND FUTURE SCOPE 28

5.1 Conclusions 28

5.2 Future Scope 28

Appendix 29

References 31

ABSTRACT

"Harvesting mechanical energy from human motion is an attractive approach for obtaining clean and sustainable electric energy to power wearable devices, which are widely used for health monitoring, activity recognition, gait analysis and so on. This project aims to create a piezoelectric energy harvester for the parasitic mechanical energy in shoes originated from human motion. The harvester is based on a specially designed sandwich structure with a thin thickness, which makes it readily compatible with a shoe. Besides, consideration is given to both high performance and excellent durability. The harvester provides an average output voltage of 5 V during a walk at a frequency of roughly 1 Hz. Furthermore, a direct current (DC) power supply is built through integrating the harvester with a power management circuit. The DC power supply is used by a wireless transmitter to send pressure variation data to receiver circuit for accurate location detection using Barosense Algorithm."

LIST OF FIGURES AND TABLES

- **Table 1** **Arduino Uno Specifications**
- **Table 2** **BMP180 Sensor Pins**
- **Fig 1** **Block Diagram of System**
- **Fig 2** **Arduino Micro**
- **Fig 3** **Arduino IDE**
- **Fig 4** **BMP180 Pressure Sensor**
- **Fig 5** **Piezoelectric Principle**
- **Fig 6** **Block Diagram of Transmitter Circuit**
- **Fig 7** **Transmitter Circuit**
- **Fig 8** **Block Diagram of Receiver Circuit**
- **Fig 9** **Receiver Circuit**

Chapter 1. Introduction

1.1. Energy & Emergency Scenario

Energy Sources on portable devices is a serious problem requiring novel ways to detect and mitigate it. Harnessing different and innovative type of energy sources which were not harnessed before is the only way to solve power crunch. Further, crowd sourcing this information allows for use of these strategies quickly and in places where infrastructure is not available.

Emergency response is one of the most important duties of Government and every second matters while the rescue of person as each second make a difference between life and death. We should use our mind and resources for these situations as they make a difference in situations.

1.2. Motivation for this Work

In this work, we present an unconventional method. Our idea is design is to design a product which detects the location of an individual sends the location co-ordinates to the receiver using a complex Machine Learning based algorithm using only pressure related data and matching it with the dataset present in the model. The whole setup will be based in a shoe and will be powered by only piezoelectricity which makes it self-sustainable. Mode of communication will be 433 MHz RF transmission.

Harvesting mechanical energy from human motion is an attractive approach for obtaining clean and sustainable electric energy to power wearable sensors, which are widely used for health monitoring, activity recognition, gait analysis and so on. Using barometer in location detection may sound a bit unconventional but with the advancement in computing algorithms and miniaturizing and power amplification of sensors, it makes a possible solution for future.

1.3. Outline of this Report

This report contains detailed information for construction Location Detection Using Barosense on Piezoelectricity Based Shoes.

The report is divided into 5 Chapters which look into the various aspects of the knowledge required and construction methodology.

I. **Introduction** contains brief information about the energy scenario of wearable technology and why it is needed for emergency response. It also contains what factors led to the development of this project.

II. **Literature Survey** shows the analyses and researches made in the field of your interest and result already published, taking into account the various parameters of the project and the extent of the project. It contains information about energy scenario, previous developments of location based technologies & microcontrollers. We also devised the problem statement and objectives of the work to be completed along with the gist of the whole survey.

III. **System Description** contains the information about the instruments required. It also has the information about the hardware, control mechanism and data logger required for the objectives of the project.

IV. **Performance of the System** contains the details about the experimentation and analysis of its behaviour during a specified time along with recorded data which is analysed appropriately.

V. **Conclusions and Future Scope** contains information about the gist of the report and future modifications to be carried out during prototype development phase.

Chapter 2. Literature Survey

2.1 Introduction

In this work, we present an unconventional method. Our idea is design is to design a product which detects the location of an individual sends the location co-ordinates to the receiver using a complex Machine Learning based algorithm using only pressure related data and matching it with the dataset present in the model. The whole setup will be based in a shoe and will be powered by only piezoelectricity which makes it self-sustainable. Mode of communication will be 433 MHz RF transmission.

Harvesting mechanical energy from human motion is an attractive approach for obtaining clean and sustainable electric energy to power wearable sensors, which are widely used for health monitoring, activity recognition, gait analysis and so on. Using barometer in location detection may sound a bit unconventional but with the advancement in computing algorithms and miniaturizing and power amplification of sensors, it makes a possible solution for future.

2.2 Overview of the Work

The work of RO bucket can be summarized as follows:

I. **Hardware** is the most important part of the project as it is important to make ergonomic and durable equipment required for the objectives to be achieved .Positioning of equipments and cost effectiveness is also an important aspect.

II. **Transmitter & Receiver Circuits** are the heart of the project which will analyse all the data and send appropriate signals to take the required control actions to take place. It also helps to display the required data for analysis.

III. **Control Mechanism Cum Data Logger** is also required as analysis require systematic retrieval of data along with a presentable data format. It provides real time data in a very appropriate and executable form for the Barosense Algorithm.

IV. **Performance of the System** also needs to be accounted as it helps to detect the faults and anomalies which needed to be rectified in order to get genuine and accurate data.

2.3 Location Detection

Global navigation satellite systems (GNSS) allow specialized radio receivers to determine their 3-D space position, as well as time, with an accuracy of 2–20 metres or tens of nanoseconds. Currently deployed systems use microwave signals that can only be received reliably outdoors and that cover most of Earth's surface, as well as near-Earth space.

The existing and planned systems are:

- Global Positioning System – US military system, fully operational since 1995
- GLONASS – Russian military system, fully operational since October 2011
- Galileo – On 21 October 2011 the first two of four operational satellites were launched the next two will follow in 2012. Expected completion is 2019
- Beidou navigation system – a planned project in China
- Indian Regional Navigation Satellite System – a planned project in India

Networks of land-based positioning transmitters allow specialized radio receivers to determine their 2-D position on the surface of the Earth. They are generally less accurate than GNSS because their signals are not entirely restricted to line-of-sight propagation, and they have only regional coverage. However, they remain useful for special purposes and as a backup where their signals are more reliably received, including underground and indoors, and receivers can be built that consume very low battery power. LORAN is such a system.

A local positioning system (LPS) is a navigation system that provides location information in all weather, anywhere within the coverage of the network, where there is an unobstructed line of

sight to three or more signalling beacons of which the exact position on earth is known. A special type of LPS is the real-time locating system; which also allows real-time tracking of an object or person in a confined area such as a building.

An indoor positioning system (IPS) is a network of devices used to locate people or objects where GPS and other satellite technologies lack precision or fail entirely, such as inside multistory buildings, airports, alleys, parking garages, and underground locations. A large variety of techniques and devices are used to provide indoor positioning ranging from reconfigured devices already deployed such as smartphones, WiFi and Bluetooth antennas, digital cameras, and clocks; to purpose built installations with relays and beacons strategically placed throughout a defined space. IPS has broad applications in commercial, military, retail, and inventory tracking industries. There are several commercial systems on the market, but no standards for an IPS system. Instead each installation is tailored to spatial dimensions, building materials, accuracy needs, and budget constraints. Lights, radio waves, magnetic fields, acoustic signals, and behavioral analytics are all used in IPS networks. IPS can achieve position accuracy of 2cm[3], which is on par with RTK enabled GNSS receivers that can achieve 2cm accuracy outdoors.

Indoor positioning systems use different technologies, including distance measurement to nearby anchor nodes (nodes with known fixed positions, e.g. WiFi / LiFi access points, Bluetooth beacons or Ultra-Wideband beacons, such as those used in the VBOX Indoor Positioning System, which offers 2cm accuracy), magnetic positioning, dead reckoning.They either actively locate mobile devices and tags or provide ambient location or environmental context for devices to get sensed.

The localized nature of an IPS has resulted in design fragmentation, with systems making use of various optical, radio,or even acoustic technologies.

The above systems have a major drawback as the required sensors consume a lot of power which cannot be integrated to the piezoelectric system so barometric data based detection is a more suitable option as power consumption is in the range of few milliwatts.

2.4 BAROSense Algorithm

Road traffic congestion is a worldwide problem that continues to increase, resulting in adverse environmental and health consequences in addition to wasted fuel and individual productivity loss. Detecting congestion and communicating it in a timely manner may enable a number of mitigation strategies such as re-directing traffic as well as individuals adopting alternate routes or transportation methods. We seek to crowd-source road congestion information detected on individual user's smart phones as a low-cost approach for such detection. To encourage users to participate in such crowd-sourcing, it is critical that the information is collected conveniently, with as little user action required as possible, and the use of low-cost sensors that would be ubiquitously available on smart phones. Moreover, unlike the use of GPS, the use of these sensors should consume very little energy, thus resulting in minimal drain on the phone's battery. We propose using the barometer sensor present in mobile phones to detect traffic congestion. Roads which seem perfectly flat to naked eye actually vary in altitude at different points along the way. The barometer sensor is sensitive enough to measure these altitude changes. On a congested road, a vehicle covers a much shorter distance over a time period. A vehicle experiences a significantly larger number of altitude changes on a free flowing road compared to a congested road. This forms the basis for our traffic congestion detection. We extract features based on the altitude change and use a Support Vector Machine (SVM) as a classifier to initially classify into two broad categories of vehicular state: still and in motion. The sequence of vehicle states is then used to determine the traffic condition. Traffic condition is categorized into 3 states: `stuck', `congestion' and `moving', based on chosen thresholds for the number of still/motion states.

2.5 Microcontrollers

As of 2008, there are several dozen microcontroller architectures and vendors including:

- ARM core processors (many vendors)
- Microchip Technology Atmel AVR (8-bit), AVR32 (32-bit), and AT91SAM (32-bit)
- Cypress Semiconductor's M8C core used in their PSoC (Programmable System-on-Chip)
- Freescale ColdFire (32-bit) and S08 (8-bit)
- Freescale 68HC11 (8-bit), and others based on the Motorola 6800 family

- Intel 8051, also manufactured by NXP Semiconductors, Infineon and many others

Many others exist, some of which are used in very narrow range of applications or are more like applications processors than microcontrollers. The microcontroller market is extremely fragmented, with numerous vendors, technologies, and markets. Note that many vendors sell or have sold multiple architectures.

In this device, low computational ability and low level of transmission speed is required. Meagre Data Memory is required for data logger. An open source and robust architecture is required for the controller as well as the cost of the controller should be less. Considering the above mentioned requirements **ARDUINO Micro** is best suited option for the device.

2.6 Problem Statement

"To develop a low power consumption location detection system powered by piezoelectricity embedded in shoes using BAROSense Algorithm."

2.7 Objectives of the Work

The following objectives are derived after carefully studying the literature required for the RO Bucket:

1. Design of Peizoelectric Shoes

2. Fabrication of energy harvesting circuit

3. Design of Receiver and Transmitter circuits

4. Design of BaroSense Architecture

5. Integration of transmitter circuit and energy harvesting circuit

6. Integration of receiver circuit and BaroSense architecture

2.8 Summary

After studying and analysing the required literature to conceptualize the shoes ,we have defined a particular test condition. We have selected arduino as our main computing unit & BMP180 sensor the detecting the pressure variation of the track and its low power consumption as compared to GPS system.LTC58 circuits are the main power production and management system in the transmitting circuit powered by piezoelectricity. Open loop control system architecture is used in the system.

The above set parameters are tending to change during the performance analysis period to enhance the capability of the device.

Chapter 3. System Description

3.1 Introduction

In this work, we present an unconventional method. Our idea is design is to design a product which detects the location of an individual sends the location co-ordinates to the receiver using a complex Machine Learning based algorithm using only pressure related data and matching it with the dataset present in the model. The whole setup will be based in a shoe and will be powered by only piezoelectricity which makes it self-sustainable. Mode of communication will be 433 MHz RF transmission.

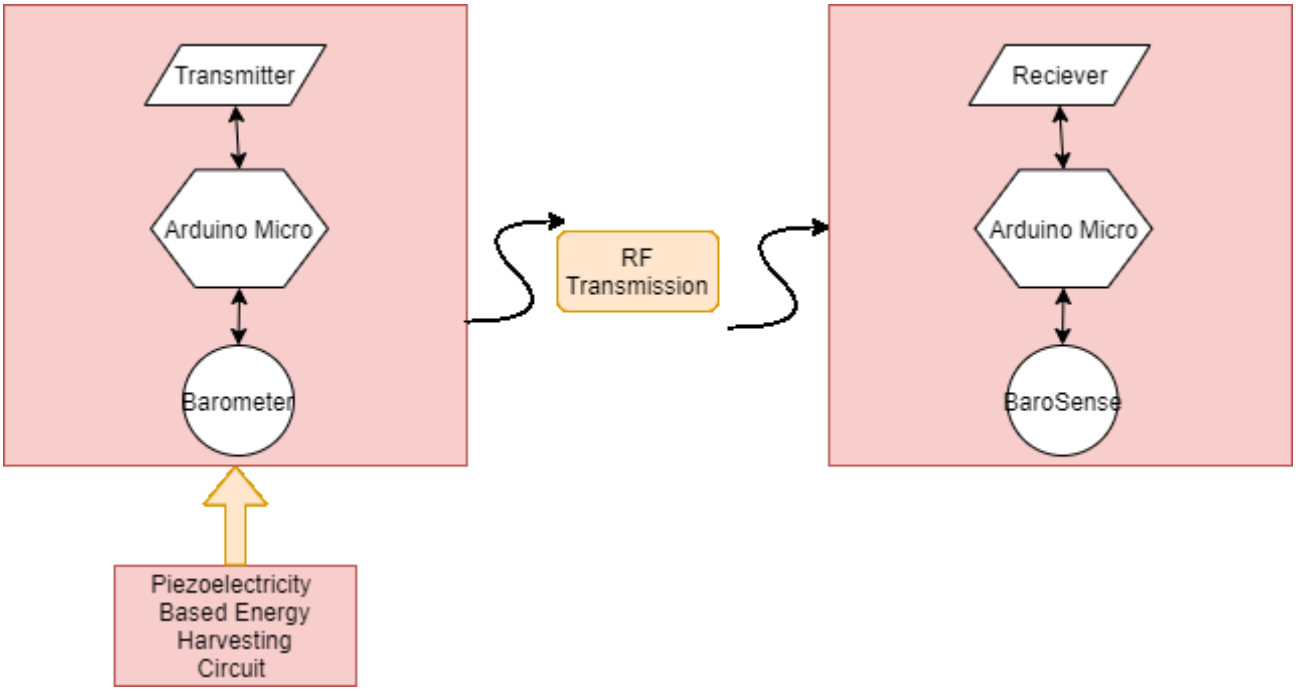

Fig 1. Block Diagram

3.1.1. Arduino

Arduino is an open-source hardware and software company, project and user community that designs and manufactures single-board microcontrollers and microcontroller kits for building

digital devices. Its products are licensed under the GNU Lesser General Public License (LGPL) or the GNU General Public License (GPL), permitting the manufacture of Arduino boards and software distribution by anyone. Arduino boards are available commercially in preassembled form or as do-it-yourself (DIY) kits.

Arduino board designs use a variety of microprocessors and controllers. The boards are equipped with sets of digital and analog input/output (I/O) pins that may be interfaced to various expansion boards ('shields') or breadboards (For prototyping) and other circuits. The boards feature serial communications interfaces, including Universal Serial Bus (USB) on some models, which are also used for loading programs from personal computers. The microcontrollers can be programmed using C and C++ programming languages. In addition to using traditional compiler tool chains, the Arduino project provides an integrated development environment (IDE) based on the Processing language project.

The Arduino project started in 2005 as a program for students at the Interaction Design Institute Ivrea in Ivrea, Italy, aiming to provide a low-cost and easy way for novices and professionals to create devices that interact with their environment using sensors and actuators. Common examples of such devices intended for beginner hobbyists include simple robots, thermostats and motion detectors.

Developer	Arduino.cc
Type	Single Board Microcontroller
Operating System	None
CPU	Atmel AVR (8-bit), ARM Cortex-M0+ (32-bit), ARM Cortex-M3 (32-bit), Intel Quark (x86) (32-bit)
Memory	SRAM
Storage	Flash,EEPROM

Table 1. Arduino Specifications

Fig 2. Arduino Micro

The Arduino integrated development environment (IDE) is a cross-platform application (for Windows, macOS, Linux) that is written in the programming language Java. It originated from the IDE for the languages Processing and Wiring. It includes a code editor with features such as text cutting and pasting, searching and replacing text, automatic indenting, brace matching, and syntax highlighting, and provides simple one-click mechanisms to compile and upload programs to an Arduino board. It also contains a message area, a text console, a toolbar with buttons for common functions and a hierarchy of operation menus. The source code for the IDE is released under the GNU General Public License, version 2.

The Arduino IDE supports the languages C and C++ using special rules of code structuring. The Arduino IDE supplies a software library from the Wiring project, which provides many common input and output procedures. User-written code only requires two basic functions, for starting the sketch and the main program loop, that are compiled and linked with a program stub main() into an executable cyclic executive program with the GNU tool chain, also included with the IDE distribution. The Arduino IDE employs the program avrdude to convert the executable code into a text file in hexadecimal encoding that is loaded into the Arduino board by a loader program in the board's firmware.

Fig 3. Arduino IDE

3.1.2. BMP180 Pressure Sensor

BMP180 is one of sensor of BMP XXX series. They are all designed to **measure Barometric Pressure** or **Atmospheric pressure**. BMP180 is a high precision sensor designed for consumer applications. Barometric Pressure is nothing but weight of air applied on everything. The air has weight and wherever there is air its pressure is felt. **BMP180 sensor** senses that pressure and provides that information in digital output. Also the temperature affects the pressure and so we need temperature compensated pressure reading. To compensate, the BM180 also has good temperature sensor.

BMP180 MODULE Features:

- Can measure temperature and altitude.
- Pressure range: 300 to 1100hPa
- High relative accuracy of ±0.12hPa

- Can work on low voltages
- 3.4Mhz I2C interface
- Low power consumption (3uA)
- Pressure conversion time: 5msec
- Potable size

BMP180 MODULE Specifications:

- Operating voltage of BMP180: 1.3V – 3.6V
- Input voltage of BMP180MODULE: 3.3V to 5.5V
- Peak current : 1000uA
- Consumes 0.1uA standby
- Maximum voltage at SDA , SCL : VCC + 0.3V
- Operating temperature: -40ºC to +80ºC

Pin Name	**Description**
VCC	Connected to +5V
GND	Connected to ground
SDA	Serial Data pin (I2C interface)
SCL	Serial Clock pin (I2C interface)
3.3V	If +5V is not present. Can power module by connecting +3.3V to this pin

Table 2. BMP180 Pins

3.1.3. LTC5588 IC

The LTC3558 is a USB battery charger with dual high efficiency switching regulators. The device is ideally suited to power single-cell Li-Ion/Polymer based handheld applications needing multiple supply rails.

Battery charge current is programmed via the PROG pin and the HPWR pin with capability up to 950mA of current at the BAT pin. The CHRG pin allows battery status to be monitored continuously during the charging process. An internal timer controls charger termination.

The part includes monolithic synchronous buck and buck-boost regulators that can provide up to 400mA of output current each and operate at efficiencies greater than 90% over the entire Li-Ion/Polymer battery range. The buck-boost regulator can regulate its programmed output voltage at its rated deliverable current over the entire Li-Ion range without drop out, increasing battery runtime.

Applications:

- SD/Flash-Based MP3 Players
- Low Power Handheld Applications

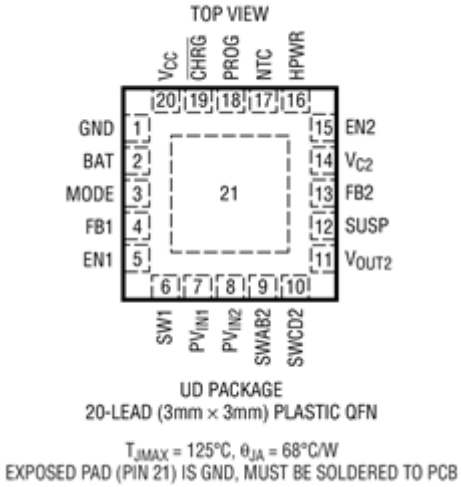

Fig 3. LTC3558 IC

3.1.4. Piezoelectric Materials

Piezoelectric materials can be used as mechanisms to transform mechanical energy, usually ambient vibration into electrical energy that can be used to power other devices. The practice of harnessing the energy around a system and converting it into usable power is termed power harvesting. By implementing power harvesting devices, portable systems can be developed that do not depend on traditional methods for providing power, such as the battery, which has a limited operating life.

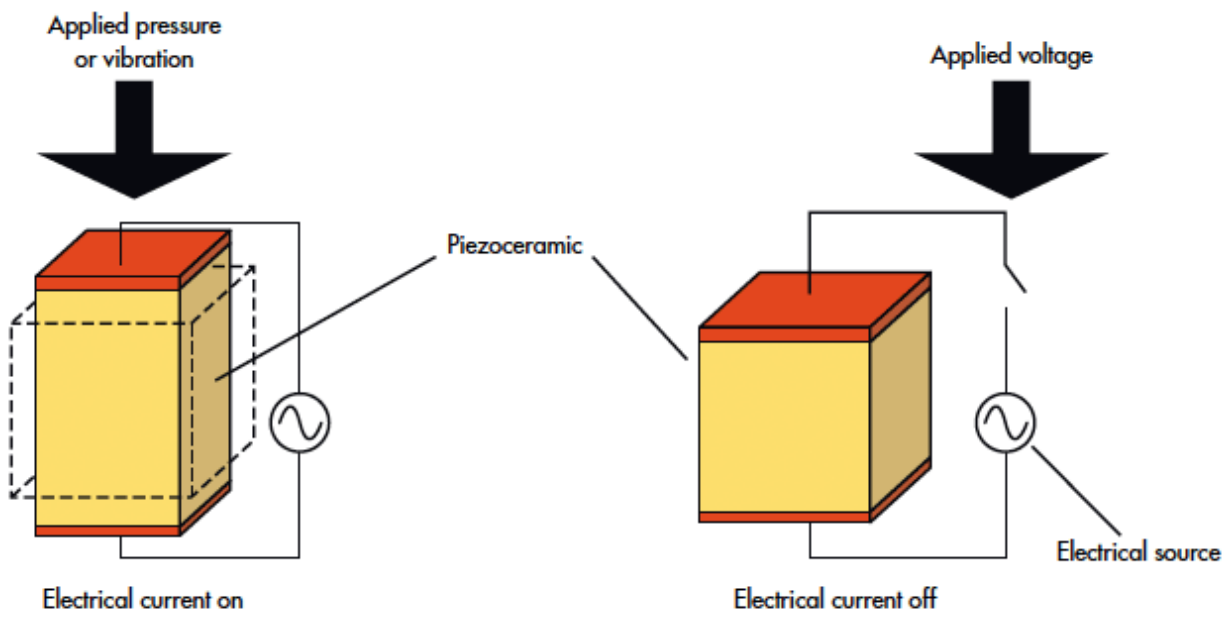

Fig 4. Piezoelectric Principle

3.2 Design of Shoe Assembly

- Since, we are basically designing the shoe assembly keeping our proud armed forces soldiers in mind. So, we just took all weather trekking shoes issued to armed forces as a base platform.
- By observing the pressure pattern of the foot print, we devised patches in set of three in the stack as well as heel part of the shoe for a efficient and maximum power production.

- An Antenna should also be present on the back of the shoe for proper signal reception.

Fig 5. Shoe Assembly

3.3 Design of Control Mechanism

3.2.1. Introduction

- There are various mode of wireless transmission but we chose RF transmission due to its universality and comparable better power consumption as well as apt range of this mode of communication.
- The frequency used for communication is 433 Mhz.
- Radio frequency transmission can be transmitted through wireless as well as coaxial cables which only adds up to its advantages.

3.2.2. Transmitter Circuit

- The transmitter circuit is to be embedded in the shoe for the proper functioning. The main objective of this circuit is to transmit the buffer values of pressure variation for proper detection of location which is a self powered unit using energy harvesting circuit from Human Motion.
- LTC3558 is the main IC for converting human motion into usable electrical energy for wearable technology which has application beyond this project and the power is amplified by a bunch of capacitors in the circuits.
- Piezo-Ceramic is used as main energy producer from shear stress produced by Human Motion.

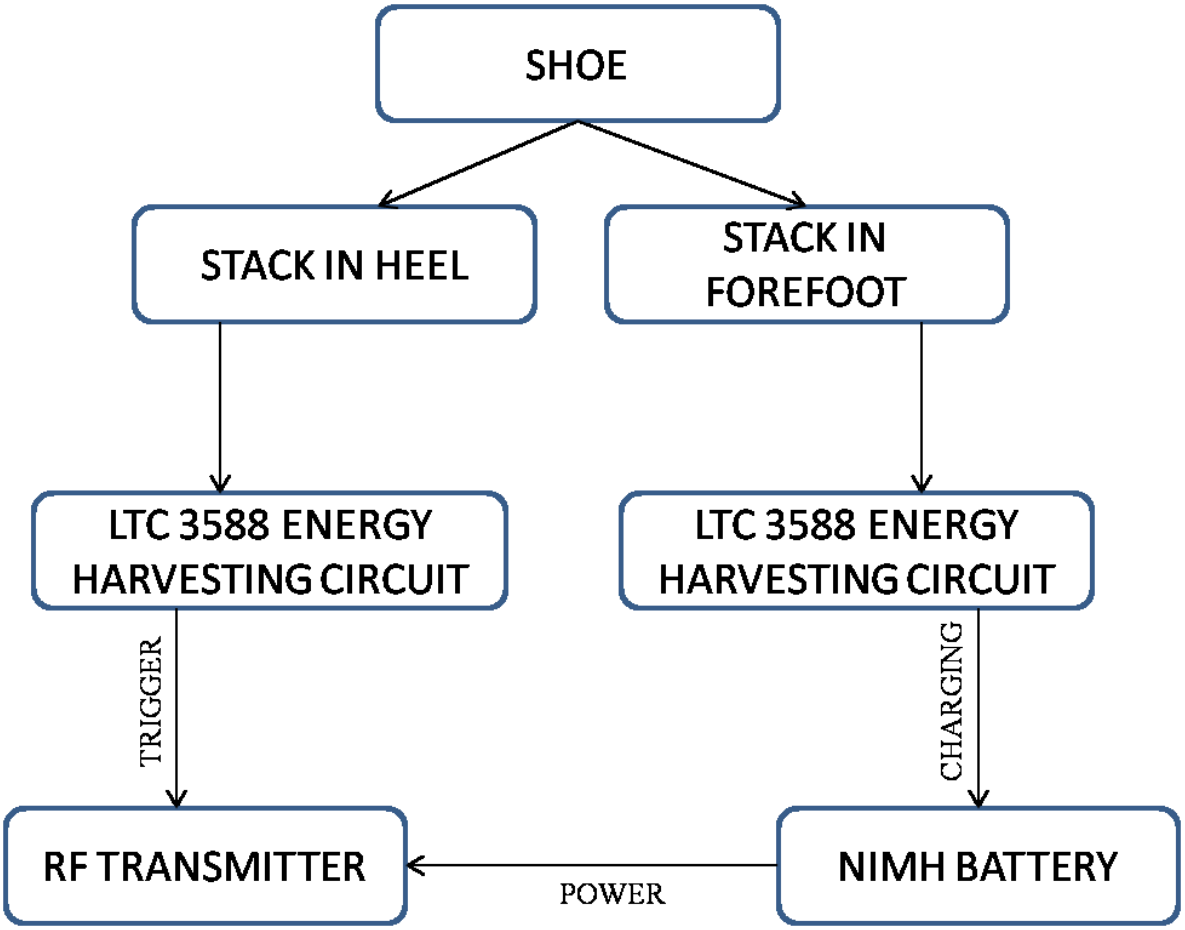

Fig 6. Block Diagram of Transmitter Circuit

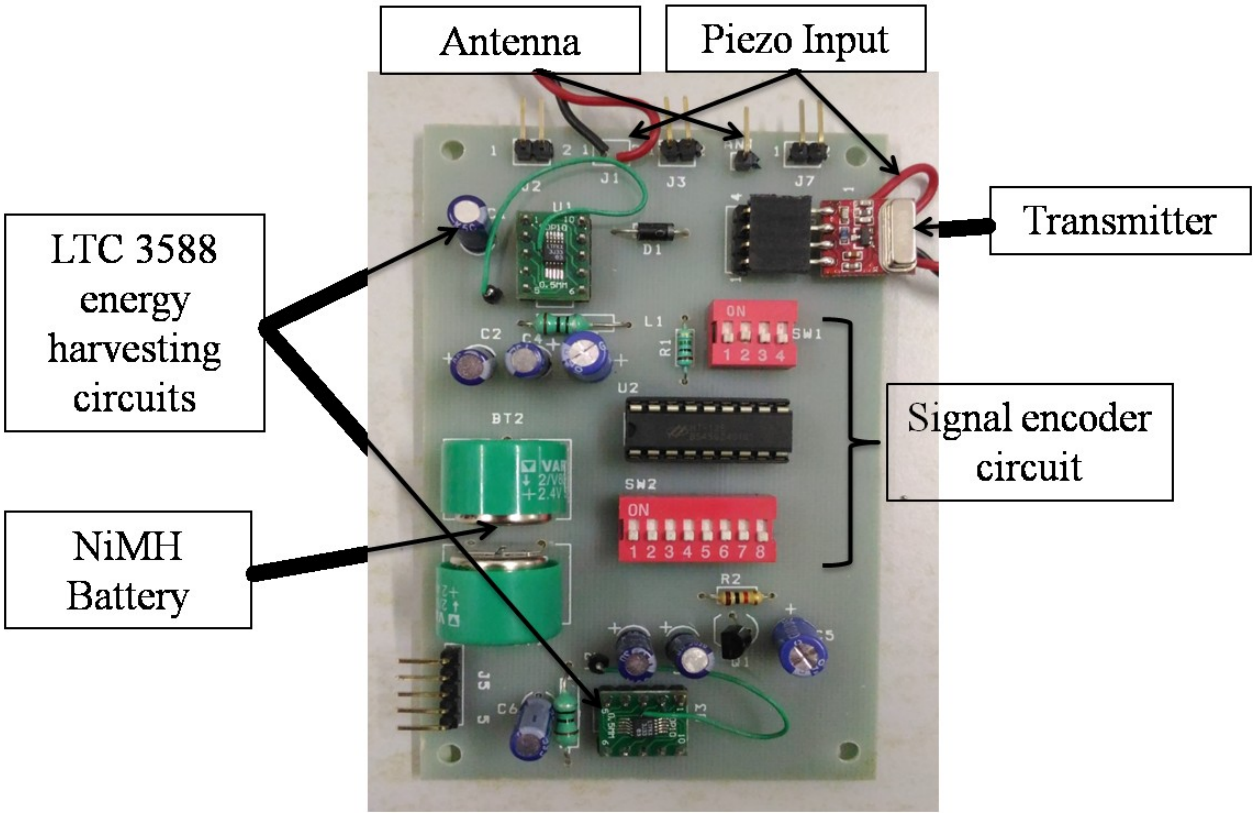

Fig 7. Transmitter Circuit

3.2.3. Receiver Circuit

- The receiver circuit is the main brain behind the location detection. The main objective of this circuit is to receive the buffer values of pressure variations which is fed to the microcontroller which is empowered by the BAROSense Algorithm and using the existing database present in the system.
- It is also portable circuit but it is powered by the rechargeable battery and is the soul of location detection scenario which pinpoints the exact location in a 100metre radius of the terrain.
- Rasberry Pi could be used to increase the computational power of the system for a large dataset.

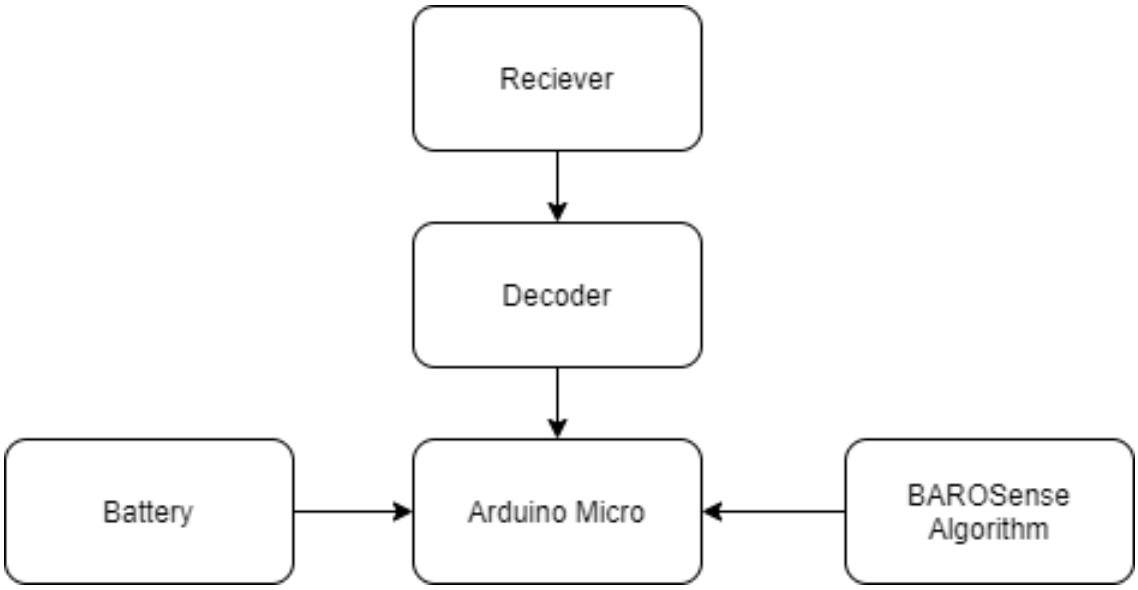

Fig 8. Block Diagram of Receiver Circuit

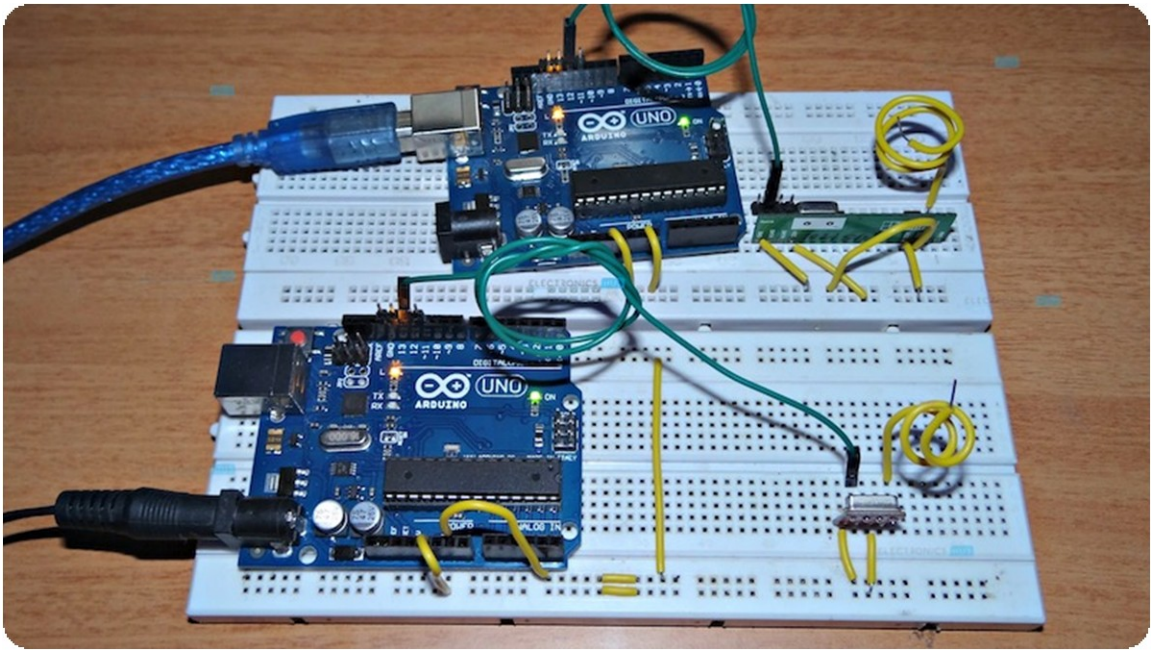

Fig 9. Receiver Circuit

Chapter 4. Performance of System in Real Time Environment

4.1. Introduction

Performance Analysis is a specialist discipline involving systematic observations to enhance performance and improve decision making, primarily delivered through the provision of objective statistical (Data Analysis) and visual feedback (Video Analysis).

The performance of the device in real-time environment is very essential for the developer to check out for problems and get feedback for its refinement of results. The system records data and conveys the output using LCD screen and Serial Monitor.

4.2. Results and Discussions

- The results produced were not analyzed to a great extent due to extensive lockdown caused by COVID 19.
- But pressure variation data was received properly with negligible garbage values and integration of this system with BAROSense Algorithm is still yet to be done .
- While performance of the system was with acceptable limits of error.

Chapter 5. Conclusions and Future Scope

5.1. Conclusions

After the performance analysis of the data and a look into the power consumption of the system, a high quality and precise location detection environment is developed with acceptable limits of errors.

Hence, A reliable and robust low power consumption Location Detection system is conceptualized.

5.2. Future Scope

- A better sensor pressure sensor would be installed to better analyze the data.
- AI and ML algorithms would be updated for enhanced detection.
- Live Monitoring of data would also be facilitated and live graphs would also be displayed.
- Aesthetics of the whole equipment would be well planned and design would be 3D printed using a printer.
- PCB of the whole circuit would be conceptualized.

Further cost reduction parameters would be incorporated.

Appendix

1. Arduino Code

```
#include <VirtualWire.h>
const int ledPin = 9;
const int datain = 12;
void setup()
{
   vw_set_ptt_inverted(true);
   vw_set_rx_pin(datain);
   vw_setup(2000);
   pinMode(ledPin, OUTPUT);
   vw_rx_start();
}
   void loop()
{
   uint8_t buf[VW_MAX_MESSAGE_LEN];
   uint8_t buflen = VW_MAX_MESSAGE_LEN;

   if (vw_get_message(buf, &buflen))
   {
     if(buf[0]=='1')
     {
      digitalWrite(ledPin,HIGH);
```

```
      }
      if(buf[0]=='0')
      {
       digitalWrite(ledPin,LOW);
      }
    }
}
```

References

1. Dr. Naveen Aggarwal, Anuj Dimri, Harsimran Singh, Divya Bansal; dl.acm.org/doi/10.1145/3364697 "BaroSense: Using Barometer for Road Traffic Congestion Detection and Path Estimation with Crowdsourcing".

2. Dr. Naveen Aggarwal, Anuj Dimri, Harsimran Singh, Divya Bansal;IEEE "RoadSphygmo: Using barometer for traffic congestion detection".

3. Utkarsh Mehrotra;International Journal For Technological Research In Engineering Volume 4, Issue 1, September-2016 "WALKING CHARGER USING PIEZO-ELECTRIC MATERIAL"